(You may use the back side of the sheet to write down your answers.)

Conceptual Question 1 (8 points)

(a) Will hanging a magnet in front of the iron cart as in the figure make it move? Explain.

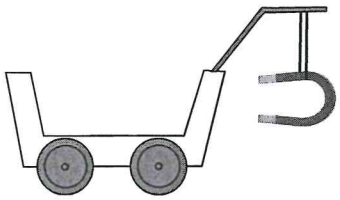

No. The force between the magnet and the iron cart is internal. We need an external force to move the cart-magnet system.

Conceptual Question 2 (8 points)

(b) Two teams are having a tug-of-war. According to Newton's third law, the force applied by team A on team B exactly equals the force with which the team B applies on team A. How can one team ever win? Explain.

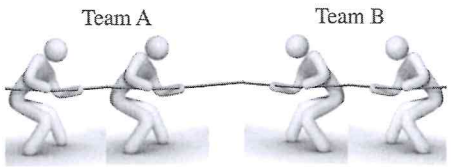

The team with better quality shoes wins.
The frictional force between the shoes and the ground determines the winner. Assume one team with two people on a rough surface and the other team with ten people but on ice. Which team would win?
It is not how hard you pull, it is how strong you stand.

Conceptual Question 3 (9 points)
(c) A non-zero net force acts on an object. Is it possible for any of the following quantities to be constant: (a) the particle's speed (b) the particle's velocity (c) the particle's kinetic energy. Explain and if yes, give an example.

a) yes, uniform circular motion. The net force is towards the center however the speed is unchanged

b) No, if there is a net force, there is acceleration and velocity changes

c) Yes, uniform circular motion. Same reason in part (a).

Problem (1) (25 points)

A small remote-control car with mass 1.50 kg moves at a constant speed of $v = 16.0$ m/s in a vertical circle inside a metal cylinder that has a radius of $R = 8.00$ m. The car is initially at point A and at a later time at point B. ($g = 10$ m/s^2)

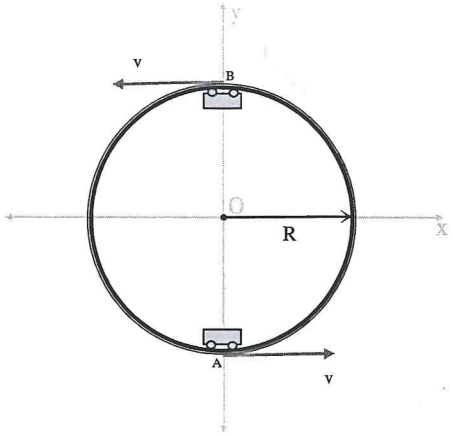

(a) (5 pts.) Find the radial-acceleration vectors of the car at points A and B in unit-vector notation.

$$a_{rad} = v^2/R = \frac{(16.0\ m/s)^2}{8.0\ m} = 32.0\ m/s^2$$

$$\vec{a}^{A}_{rad} = (32.0\ m/s^2)\hat{j} \qquad \vec{a}^{B}_{rad} = -(32.0\ m/s^2)\hat{j}$$

(b) (10 pts.) Find the *displacement*, *average velocity* and *average acceleration* vectors of the car between points A and B in unit-vector notation.

$$\Delta\vec{r} = \vec{r}_2 - \vec{r}_1 = (8.00m)\hat{j} - (-8.00m)\hat{j}$$

$$\Delta\vec{r} = (16.0m)\hat{j}$$

$$t_{AB} = \frac{(8.00m)\pi}{(16.0m/s)} = \frac{\pi}{2}\ s$$

$$\vec{v}_{av} = \frac{\Delta\vec{r}}{\Delta t} = \frac{(16.0m)\hat{j}}{\pi/2\ s} = \left(\frac{32.0}{\pi}\ m/s\right)\hat{j}$$

$$\vec{a}_{av} = \frac{\Delta\vec{v}}{\Delta t} = \frac{(-32.0\ m/s)\hat{j}}{\pi/2\ s} = \frac{-64.0\ m/s^2}{\pi}\hat{j}$$

(c) (10 pts.) What is the ratio of the normal force exerted on the car by the walls of the cylinder at point A (at the bottom of the vertical circle) to that at point B (at the top of the vertical circle)?

$$\Sigma\vec{F}_A = N_A - mg = mv^2/R \qquad N_A = m(g + v^2/R)$$

$$\Sigma\vec{F}_B = N_B + mg = mv^2/R \qquad N_B = m(-g + v^2/R)$$

$$\frac{N_A}{N_B} = \frac{(10 + 32.0)\ m/s^2}{(-10 + 32.0)\ m/s^2} = \frac{21}{11} \simeq 2$$

$N_A/N_B = 21/11$

Problem (2) (25 points)

An object of mass $m = 0.5$ kg is launched by applying a constant force $F = 10.5$ N parallel to the inclined plane as shown in the figure. The coefficient of kinetic friction between the surface of the incline and the object is $\mu_k = 0.5$. At the instant the object leaves the incline the only force acting on the object is due to gravity. ($g = 10$ m/s^2)

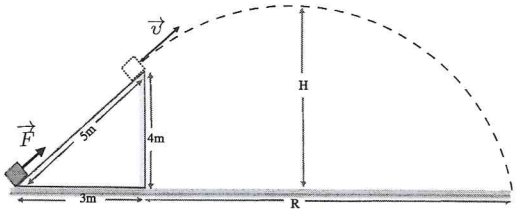

(a) (10 pts.) What is the speed of the object v at the top of the incline?

$$(\vec{F} + \vec{F_g} + \vec{F_f}) \cdot \Delta\vec{s} = \Delta K = \frac{1}{2} m v^2$$

$$\left[10.5N - (5.0N)\frac{4}{5} - (5.0N)\frac{3}{5}\, 0.5\right](5.0m) = \frac{1}{2}(0.5kg)\, v^2$$

$$v^2 = 100\ m^2/s^2 \Rightarrow v = 10\ m/s$$

$\boxed{v = 10\ m/s}$

(b) (8 pts.) What is the max height H above the ground that the rocket reaches?

$v_x = 6.0\ m/s \quad v_y = 8.0\ m/s$ (at the highest point $v_y = 0$)

$$0 = v_y^2 - 2g\Delta h \Rightarrow \Delta h = \frac{(8.0\ m/s)^2}{2(10\ m/s^2)} = 3.2\ m$$

$$H = 4.0m + 3.2m = 7.2m$$

$\boxed{H = 7.2m}$

(c) (7 pts.) Find the range of the object R beyond the incline.

$$0 = 4.0m + (8.0\ m/s)t - \frac{1}{2}(10\ m/s^2)t^2$$

$$t_{1,2} = \frac{-8.0\ m/s \mp \sqrt{(64.0\ m^2/s^2) - 4(4.0m)(-5\ m/s^2)}}{2(-5\ m/s^2)}$$

$$t_{1,2} = \frac{-8.0\ m/s \mp \sqrt{144\ m^2/s^2}}{-10\ m/s^2} \qquad t_1 = 2.0\ s$$

$\boxed{R = 12.0\ m}$

$$R = v_x t_1 = (6.0\ m/s)(2.0\ s) = 12.0\ m$$

Problem (3) (25 points)

Two masses $m_1 = 8.0$ kg and $m_2 = 4.0$ kg are on a frictionless tabletop and $m_3 = 6.0$ kg is hanging from m_2, as shown in the figure. The coefficient of kinetic and static friction between m_1 and m_2 are $\mu_k = 0.40$ and $\mu_s = 0.50$, respectively.

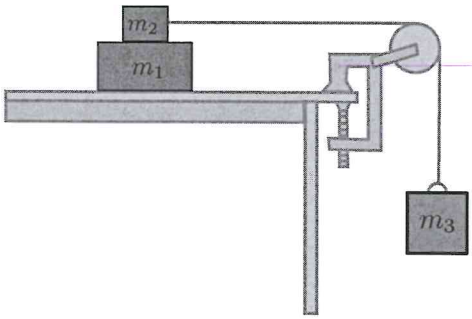

(a) (10pts.) Draw the free-body diagrams of the three masses.

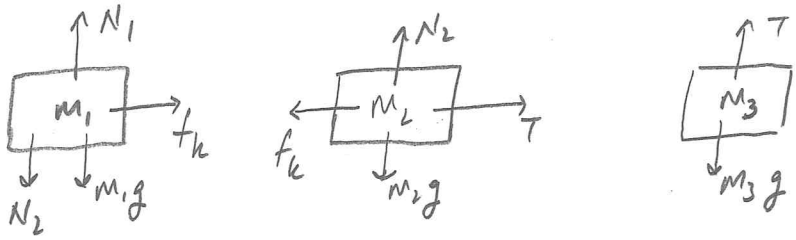

$N_2 = m_2 g$

$N_1 = N_2 + m_1 g$

$N_1 = (m_1 + m_2) g$

(b) (15pts.) What are the accelerations of m_1 and m_2?

$a_2 = a_3$

for m_3

$\Sigma F_y = m_3 g - T = m_3 a_2 \Rightarrow T = m_3 (g - a_2)$

for m_2

$\Sigma F_x = T - f_k = m_2 a_2$

$m_3 (g - a_2) - m_2 g \mu_k = m_2 a_2$

$$\frac{m_3 g - m_2 g \mu_k}{(m_2 + m_3)} = a_2 \Rightarrow a_2 = \frac{60N - (40N)\,0.4}{10\,kg} = 4.4\,m/s^2$$

for m_1

$\Sigma F_x = f_k = m_1 a_1$

$m_2 g \mu_k = m_1 a_1$

$a_1 = \frac{m_2}{m_1} g \mu_k = (0.5)(10\,m/s^2)\,0.4$

$a_1 = 2.0\,m/s^2$

$a_1 = 2.0\,m/s^2$

$a_2 = 4.4\,m/s^2$